AddStoris
Towel holder twin-handle
Surfaces: **Brushed Black Chrome** Article Number: **41770340**

Description

product features

- wall-mounted
- material: metal
- material holder: plastic
- fixed
- length: 445 mm
- with mounting material
- concealed fastening
- drilling distance: 26 mm
- diameter drill hole: 6 mm

Design awards

DESIGN AWARD 2021

reddot winner 2021

Product image

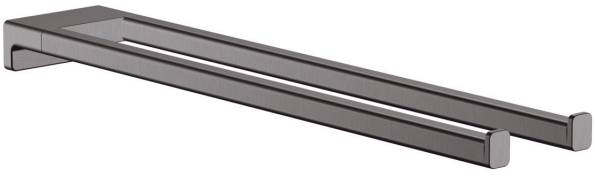

Scale drawing

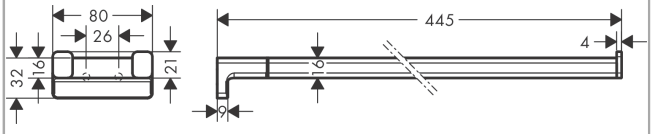

AddStoris
Towel holder twin-handle
Surfaces: **Brushed Black Chrome** Article Number: **41770340**

Exploded Drawing

Year of production: **>04/21**

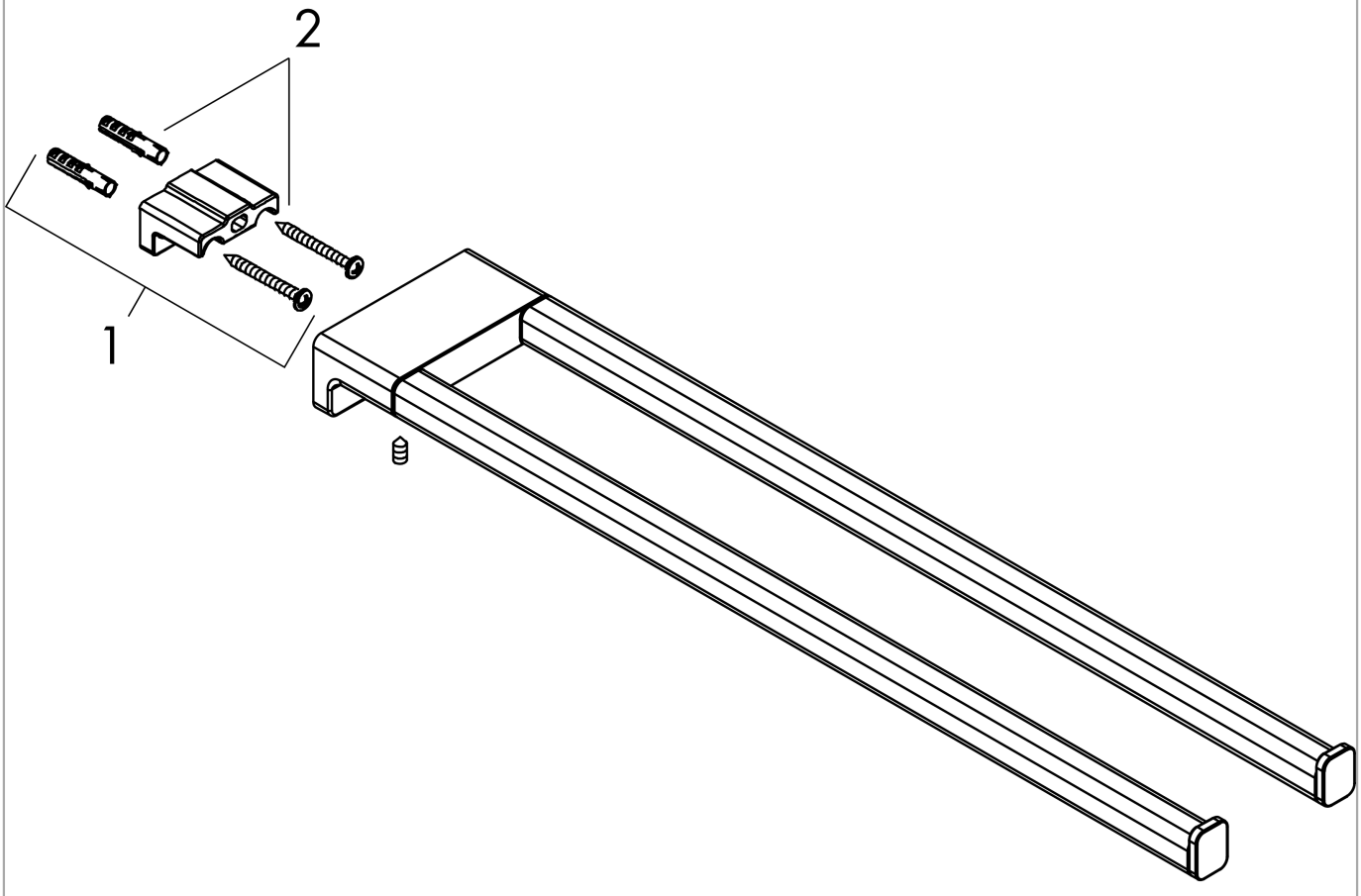

AddStoris
Towel holder twin-handle
Surfaces: **Brushed Black Chrome** Article Number: **41770340**

Spare part list

Year of production: **>04/21**

Pos.	Description	Article Number	Price	PU
1	support element	94166000	€ 22,37	1
2	mounting set	40915000	€ 11,31	1